ARM DAP

ARM DAP分为DP（debug port）和AP (access port)。

DP一般和串口DP或JTAG口DP

AP一般有AHB-AP, AXI-AP, APB-AP, JTAG-AP, mem-ap等

一般来讲，AXI-AP，AHB-AP，APB-AP是执行MEM-AP结构，访问对应总线的memory system.

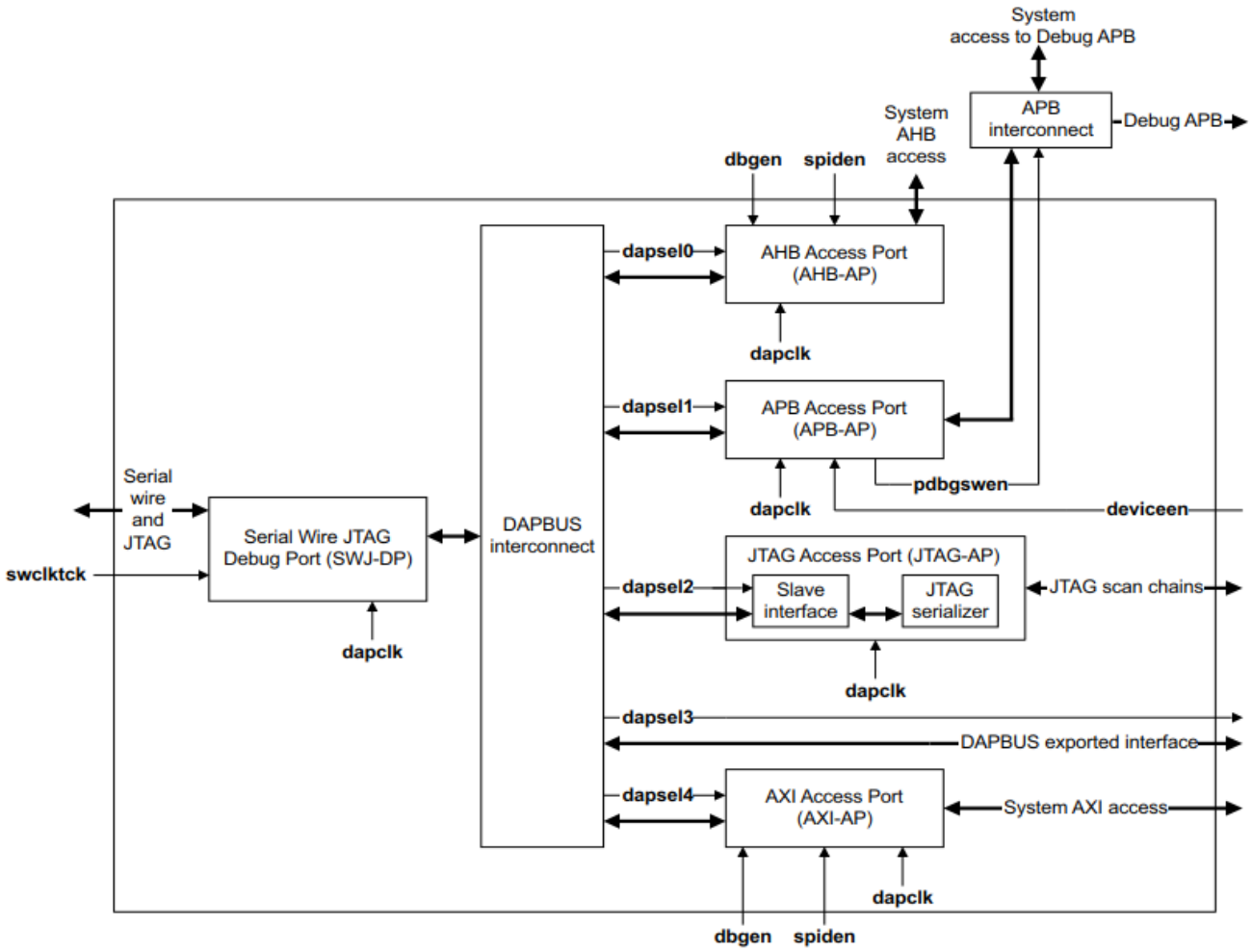

Figure 4-1 Structure of the CoreSight SoC-400 DAP components

1. JTAG DP IR command

Table 3-209 JTAG-DP register summary

4-bit IR instruction value[a]	8-bit IR instruction value[b]	JTAG-DP register	DR scan width	Description
0b1000	0b11111000	ABORT	35	JTAG-DP Abort Register, ABORT.
0b1010	0b11111010	DPACC	35	JTAG DP/AP Access Registers, DPACC/APACC.
0b1011	0b11111011	APACC	35	
0b1110	0b11111110	IDCODE	32	JTAG Device ID Code Register, IDCODE.
0b1111	0b11111111	BYPASS	1	JTAG Bypass Register, BYPASS.

a. cxdapswjdp implemented with parameter IRLEN8=0.
b. cxdapswjdp implemented with parameter IRLEN8=1.

2. DPACC & APACC TDR

通过DPACC TDR去访问DP register,通过APACC TDR去访问AP register
其定义如下：

TDR length为35bit, 低bit数据先传。

TDI输入数据格式定义如下：

- bit[34:3]传32bit写数据,
- bit[2:1]传DP或AP的地址A[3:2]
- bit[0] 表示读(1)或者写操作(0)

TDO输出数据格式定义如下：

- bit[34:3]传32bit读结果数据,
- bit[2:0]表示读响应ACK, 0b010 - OK/FAULT, 0b001 - WAIT

The operation of the DPACC and APACC registers is shown in the following figure:

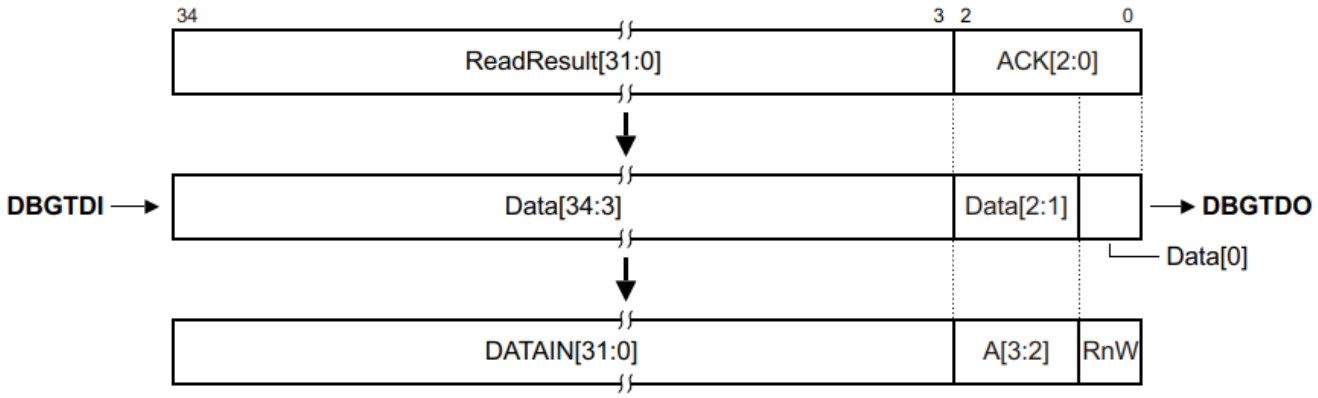

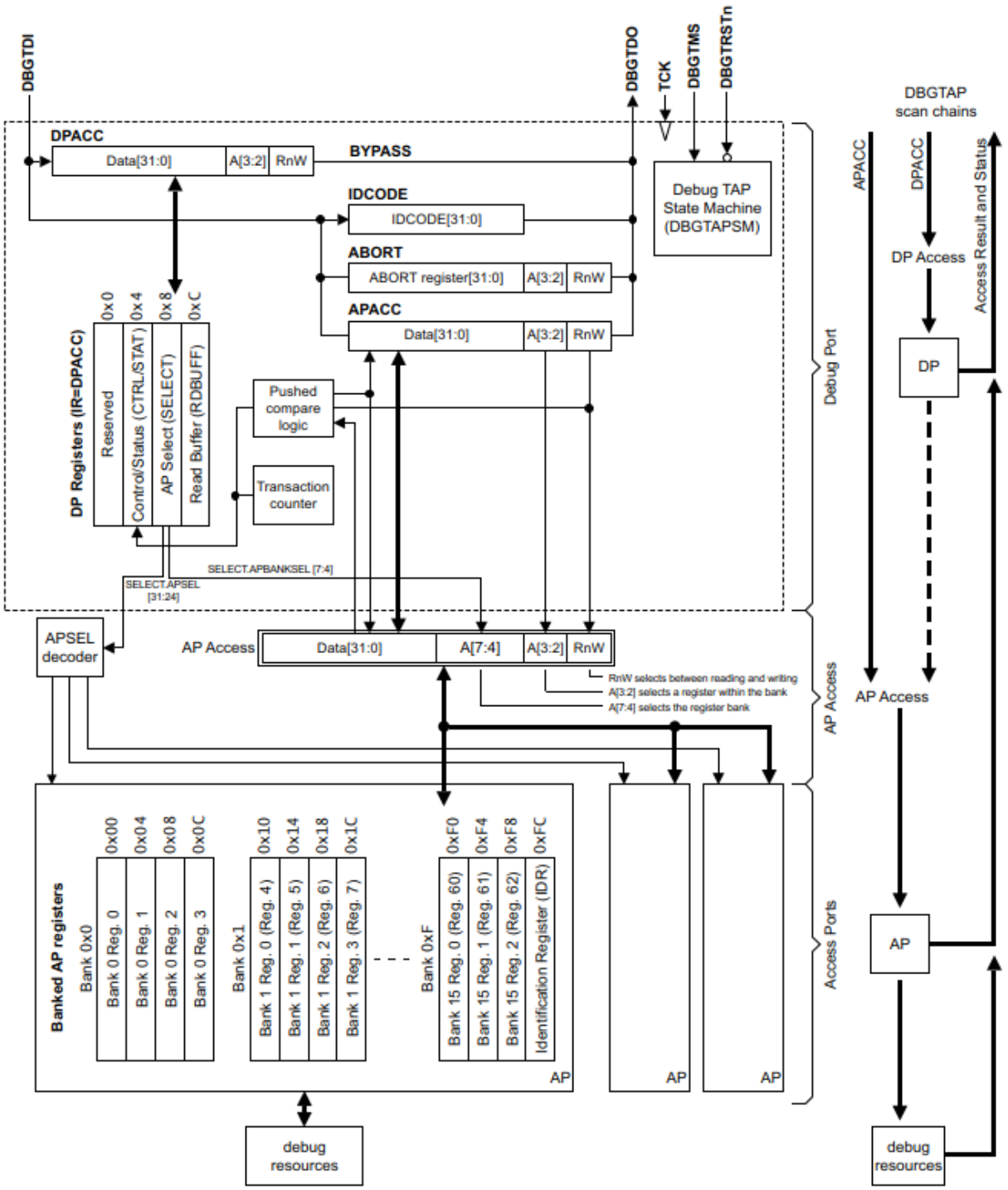

Figure A1-2 Structure of the DAP, showing DPv0 JTAG-DP accesses to a generic AP

在操作APACC时，会发起对应的AP操作，一般分为AP写和AP读操作，以下是AP读需要注意的地方。

如果是AP读的话，需要再读一次TDR，但是如果IR还是指定为APACC的话，就会再触发一次AP操作，所以此时可以临时用IR切换为DPACC，这样读结果不会重新AP操作。

通过DP.RDBUFF将AP读数据取出。

The purpose and behavior of RDBUFF is DATA LINK DEFINED:

JTAG-DP The Read Buffer is architecturally defined to provide a DP read operation that does not have any side effects. This definition allows a debugger to insert a DP read of RDBUFF at the end of a sequence of operations, to return the final AP Read Result and ACK values.

3. DP register summary

Table B3-5 JTAG-DP Register access summary.

Register	Access	Address (A[a],SELECT.DPBANKSEL)		
		DPv0	DPv1	DPv2
CTRL/STAT	RW	0x4, -	0x4, 0x0	0x4, 0x0
DLCR	RW	-	0x4, 0x1	0x4, 0x1
DLPIDR	RO	-	-	0x4, 0x3
DPIDR	RO	-	0x0, x	0x0, x
EVENTSTAT	RO	-	-	0x4, 0x4
RDBUFF	RO	0xC, -	0xC, x	0xC, x
SELECT	WO[b]	0x8, -	0x8, x	0x8, x
TARGETID	RO	-	-	0x4, 0x2

a. Bits [1:0] of the address are always 0b00.

b. RW for DPv0

SELECT:

The SELECT bit assignments are:

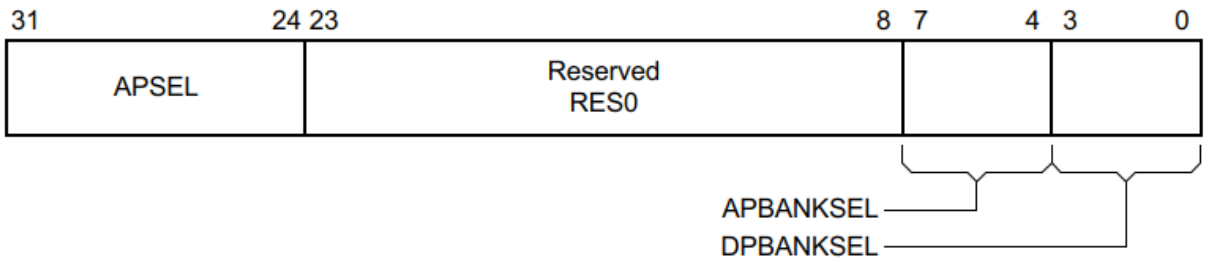

4. AP register summary

4.1 AHB-AP register summary

- AP的地址[7:4]来自于 DP.SELECT寄存器的[7:4]
- AP的地址[3:2]来自于APACC TDR里面的A[3:2]地址

3.16.2 AHB-AP register summary

Table 3-205 shows the AHB-AP register summary.

Table 3-205 AHB-AP register summary

Offset	Type	Reset value	Name
0x00	RW	0x40000002	*AHB-AP Control/Status Word register, CSW, 0x00* on page 3-179, CSW.
0x04	RW	0x00000000	*AHB-AP Transfer Address Register, TAR, 0x04* on page 3-181, TAR.
0x08	-	-	Reserved, SBZ.
0x0C	RW	-	*AHB-AP Data Read/Write register, DRW, 0x0C* on page 3-181, DRW.
0x10	RW	-	*AHB-AP Banked Data registers, BD0-BD03, 0x10-0x1C* on page 3-181.
0x14	RW	-	
0x18	RW	-	
0x1C	RW	-	

Table 3-205 AHB-AP register summary (continued)

Offset	Type	Reset value	Name
0x20-0xF7	-	-	Reserved, SBZ.
0xF8	RO	IMPLEMENTATION DEFINED	*AHB-AP Debug Base Address register, ROMBASE, 0xF8* on page 3-182.
0xFC	RO	0x64770001	*AHB-AP Identification Register, IDR, 0xFC* on page 3-182, IDR.

5. verilog example code

AHB-AP只能生成32bit的ahb地址 AXI-AP可以生成64bit的axi地址。

具体的APSEL可根据实际的dap与ap间的连接关系确定

当然也可以进行APSEL扫描，然后去读AP的0xFC地址，通过读出的Identification Register值来确认AP类型或AP是否存在。

```
module dap(/*autoarg*/
);

task tck_cycle;
    input   t_tms;
```

```
    input   t_tdi;
    begin
        #1ns;
        // sample tdo
        sample_tdo = tdo;
        force tck_r = 1'b1;
        #20ns;
        force tms_r = t_tms;
        force tdi_r = t_tdi;
        force tck_r = 1'b0;
        #19ns;
    end
endtask

task tms5;
    begin
        repeat(5) tck_cycle(1'b1,1'b0);
    end
        tck_cycle(1'b0, 1'b0); // rti
endtask

task shift_ir;
    input   [7:0]       len;
    input   [255:0]     data;
    integer i=0;
    begin
        tck_cycle(1'b1, 1'b0);
        tck_cycle(1'b1, 1'b0);
        tck_cycle(1'b0, 1'b0);
        tck_cycle(1'b0, 1'b0);

        shift_ret = 0;
        i=0;
        repeat(len-1) begin
            tck_cycle(1'b0, data[i]);
            shift_ret[i] = sample_tdo; i = i+1;
        end
        tck_cycle(1'b1, data[i]);
            shift_ret[i] = sample_tdo; i = i+1;
        tck_cycle(1'b1, 1'b0);
        tck_cycle(1'b0, 1'b0); // rti
        tck_cycle(1'b0, 1'b0); // rti

    end
endtask
task shift_dr;
    input   [7:0]       len;
    input   [255:0]     data;
    integer i=0;
    begin
        tck_cycle(1'b1, 1'b0);
```

```
        tck_cycle(1'b0, 1'b0);
        tck_cycle(1'b0, 1'b0);

        shift_ret = 0;
        i=0;
        repeat(len-1) begin
            tck_cycle(1'b0, data[i]);
            shift_ret[i] = sample_tdo; i = i+1;
        end
        tck_cycle(1'b1, data[i]);
            shift_ret[i] = sample_tdo; i = i+1;
        tck_cycle(1'b1, 1'b0);
        tck_cycle(1'b0, 1'b0); // rti
        tck_cycle(1'b0, 1'b0); // rti

        $display("shift_dr ret = %h", shift_ret);
    end
endtask


task ahbap_write;
    input   [7:0] ap_addr;
    input   [31:0] ap_data;

    reg     [7:0] ap_sel;

    begin

    // dpacc.sel ahb-ap
    shift_ir(4, 4'ha);
    #1000;
    //shift_dr(35, 35'h0); // 32b data, 2b A[3:2] (1:ctrl, 2:ap-sel, 3:read-
buffer), 1b RnW (0:write)
    ap_sel = 8'h0;
    shift_dr(35, {{ap_sel,16'h0, ap_addr[7:4],4'h0} , 2'h2, 1'b0}); //
ap_sel = select ahb-ap   (31:24 ap_sel, 7:4 ap_banksel)
    #1000;

    // dpacc.ctrl
    shift_ir(4, 4'ha);
    #1000;
    //shift_dr(35, 35'h0); // 32b data, 2b A[3:2] (1:ctrl, 2:ap-sel, 3:read-
buffer), 1b RnW (0:write)
    shift_dr(35, {32'h10000000 , 2'h1, 1'b0}); //  CTRL/STAT.CDBGPWRUPREQ
    #1000;


    // apacc.read-buffer
    shift_ir(4, 4'hb);
    #1000;
    //shift_dr(35, 35'h0); // 32b data, 2b A[3:2] (dp_addr), 1b RnW
```

```
(0:write)
    shift_dr(35, {ap_data, ap_addr[3:2], 1'b0}); // read-buffer
    #1000;
    end
endtask

task ahbap_read;
    input   [7:0] ap_addr;
    input   [31:0] ap_data;

    reg     [7:0] ap_sel;

    begin

    // dpacc.sel ahb-ap
    shift_ir(4, 4'ha);
    #1000;
    //shift_dr(35, 35'h0); // 32b data, 2b A[3:2] (1:ctrl, 2:ap-sel, 3:read-
buffer), 1b RnW (0:write)
    ap_sel = 8'h0;
    shift_dr(35, {{ap_sel,16'h0, ap_addr[7:4],4'h0} , 2'h2, 1'b0}); //
ap_sel = select ahb-ap   (31:24 ap_sel, 7:4 ap_banksel)
    #1000;

    // dpacc.ctrl
    shift_ir(4, 4'ha);
    #1000;
    //shift_dr(35, 35'h0); // 32b data, 2b A[3:2] (1:ctrl, 2:ap-sel, 3:read-
buffer), 1b RnW (0:write)
    shift_dr(35, {32'h10000000 , 2'h1, 1'b0}); //  CTRL/STAT.CDBGPWRUPREQ
    #1000;


    // apacc.read-buffer
    shift_ir(4, 4'hb);
    #1000;
    //shift_dr(35, 35'h0); // 32b data, 2b A[3:2] (dp_addr), 1b RnW
(0:write)
    shift_dr(35, {ap_data, ap_addr[3:2], 1'b1}); // read-buffer
    #1000;


    // dpacc.reserved
    shift_ir(4, 4'ha);
    #1000;
    shift_dr(35, {32'h0 , 2'h0, 1'b0}); // for read ap buffer only, (ret
data is in [34:3])
    #1000;
    end
endtask
```

```
task ahb_write;
    input [31:0] ahb_addr;
    input [31:0] ahb_data;
    begin
        ahbap_write(8'h4, ahb_addr);
        ahbap_write(8'hc, ahb_data);
    end
endtask

task ahb_read;
    input [31:0] ahb_addr;
    reg [31:0] ahb_data;
    begin
        ahbap_write(8'h4, ahb_addr);
        ahbap_read(8'hc, 32'h0);
        ahb_data = shift_ret[34:3];
        $display("ahb_read ret = %8h", ahb_data);
    end
endtask


initial begin
    #10000;
    trstn_r = 1'b1;
    #1000;
    tms5;

    //    // idcode
    //    shift_ir(4, 4'he);
    //    #1000;
    //    shift_dr(32, 32'h0);
    //    #1000;



    ahb_write(32'h0680, 32'h3344);
    ahb_read(32'h0680);

    ahb_write(32'h0684, 32'h5566);
    ahb_read(32'h0684);


end


endmodule
```